1. Arm shaft, Thread take up lever 上轴部件

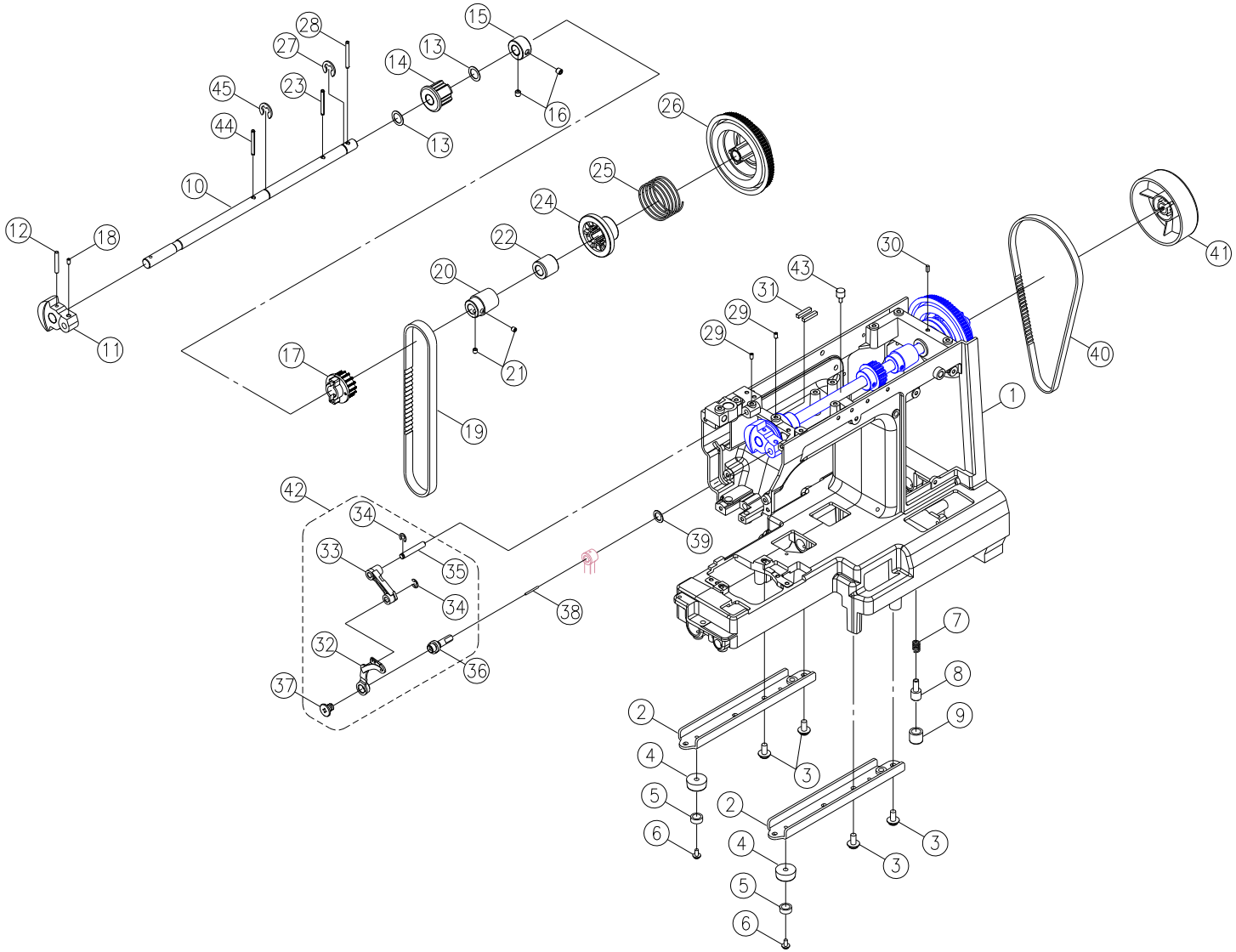

1.Arm shaft,Thread take up lever 上轴部件						
NO.	Description	Remark		NO.	Description	Remark
1-1	Arm	机壳		1-34	E-Ring	E型卡
1-2	Free arm foot	底盘脚架		1-35	Thread take up lever supporter shaft	挑线杆支体轴
1-3	Set screw	螺丝(伞型头)		1-36	Arm shaft balance pin complete	挑线杆90° 销组
1-4	Free arm base cushion rubber	底座橡胶垫 3只		1-37	Set screw	90° 销左螺丝
1-5	bush	衬套		1-38	Oil cotton	油棉
1-6	Set screw	螺丝(含华司)		1-39	Endure attrition washer	耐磨垫圈
1-7	Spring	底盘脚调节弹簧		1-40	Motor drive belt	同步带 161
1-8	Adjustment screw	底座调节螺丝		1-41	Hand wheel	手轮
1-9	Free arm base cushion	底座调节螺丝套		1-42	Thread take up lever complete	挑线杆组
1-10	Arm shaft	上轴		1-43	Arm shaft auxiliary pin	上轴辅助销
1-11	Arm shaft balance	针杆曲柄		1-44	Spring pin	弹簧销
1-12	Arm shaft balance pin	挑线杆横锤销		1-45	E-Ring	E型卡
1-13	Endure attrition washer	耐磨垫圈				
1-14	Arm shaft busing	上轴前套				
1-15	Arm shaft collar	上轴止环				
1-16	Set screw	螺丝(内六角)				
1-17	Arm shaft sprocket	上轴带轮				
1-18	Set screw	螺丝(内六角)				
1-19	Motor drive belt	上轴带轮皮带 420				
1-20	Arm shaft worm	蜗杆				
1-21	Set screw	螺丝(内六角)				
1-22	Arm shaft busing	上轴后套				
1-23	Spring pin	弹簧销				
1-24	Am shaft oolkar	绕线离合套				
1-25	Arm shaft clutch annulus spring	离合器弹簧				
1-26	Arm shaft driver belt pulley	上轴同步带轮				
1-27	E-Ring	E型卡				
1-28	Spring pin	弹簧销				
1-29	Set screw	螺丝(内六角)				
1-30	Oil cotton	羊毛毡				
1-31	Bobbin shaft oil cloth	旋梭羊毛毡 2只				
1-32	Thread take up lever	挑线杆组				
1-33	Thread take up lever supporter	挑线杆支体				

2. Pattern cam contact 花模凸轮部件

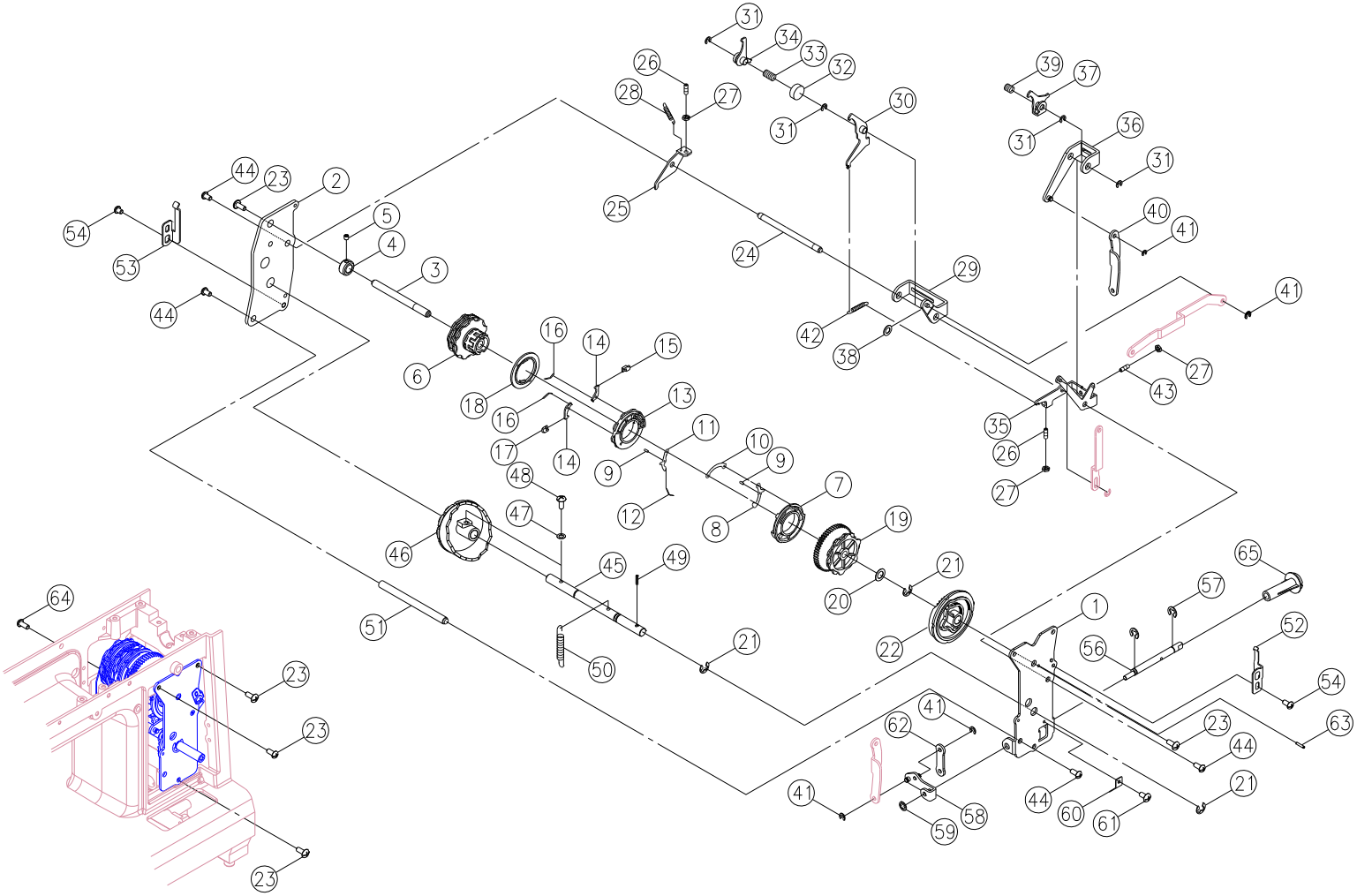

2.Pattern cam contact 花模凸轮部件

NO.	Description	Remark		NO.	Description	Remark
2-1	Pattern cam contact plate (front)	花模前板		2-34	Zigzag cam contact	阔度接触子
2-2	Pattern cam contact plate (back)	花模后板		2-35	BH adjusting crank	BH 调节腕
2-3	Pattern cam shaft	模样凸轮轴		2-36	SS cam contact supporter	SS 接触子支持台
2-4	Pattern cam shaft collar	模样凸轮轴挡圈 (φ14*7H*φ8		2-37	SS cam contact	SS 接触子
2-5	Set screw	螺丝(内六角)		2-38	Washer	垫圈
2-6	Pattern cam	模样凸轮		2-39	SS cam contact spring	接近弹簧Ⅱ
2-7	BH feed regulator cam	花样针距凸轮		2-40	Feed rock shaft	传送连杆
2-8	BH clutch contact A	花样分离片 A		2-41	E-Ring	E型卡
2-9	BH clutch shaft	圆柱销 2*6.3 2只		2-42	BH Feed crank spring	传送腕弹簧
2-10	BH clutch lever	花样分离连杆		2-43	Set screw	调节螺丝
2-11	BH clutch contact B	花样分离片B		2-44	Set screw	螺丝
2-12	BH clutch spring plate	花样分离弹簧板		2-45	Pattern selector cam shaft	选择凸轮轴
2-13	BH cam	针距凸轮		2-46	Patten selector cam	选择凸轮
2-14	BH contact	模样弹片 2只		2-47	Washer	垫圈
2-15	BH slide block R	模样弹簧板		2-48	Set screw	螺丝(伞头)
2-16	BH contact spring plate	模样弹簧板 2只		2-49	Spring pin	弹簧销
2-17	BH slide block L	花样滑块L(短)		2-50	Feed regulating crank spring	针距调节弹簧
2-18	Straight stitch cam	直线凸轮		2-51	Pattern cam contact supporter shaft	花样选择轴
2-19	SS cam	SS 凸轮		2-52	Feed regulator fix plate	花样凸轮拔杆右
2-20	Washer	垫圈		2-53	Set screw	花样凸轮拔杆左
2-21	E-Ring	E型卡		2-54	Pattern fix spring plate	螺丝
2-22	Feed regulator cam	花样凸轮		2-55	Set screw	螺丝
2-23	Set screw	螺丝		2-56	Trimming shaft	微调偏心轴
2-24	Zigzag cam contact supporter shaft	接触子支持台轴		2-57	E-Ring	E型卡
2-25	Zigzag release plate	花样选择启动拔杆		2-58	Adjusting plate	微调支持板
2-26	Set screw	调整螺丝		2-59	CS-ring	CS 扣环
2-27	Nut	调整固定螺帽		2-60	Trimming shaft plate	微调偏心轴压板
2-28	Zigzag release plate spring	摆动调节弹簧		2-61	Set screw	螺丝
2-29	Zigzag cam contact supporter	花样选择架组件		2-62	Feed regulating rod	传送调节腕连杆
2-30	BH Feed crank	BH 传送腕		2-63	Spring pin	弹簧销
2-31	E-Ring	E型卡		2-64	Set screw	螺丝
2-32	Spring pedestal	弹簧座		2-65	Trimming dial	调节旋钮
2-33	Zigzag cam contact spring	花样接近弹簧				

3. Feed regulator dial shaft, BH selector plate, BH lever plat 选择盘部件

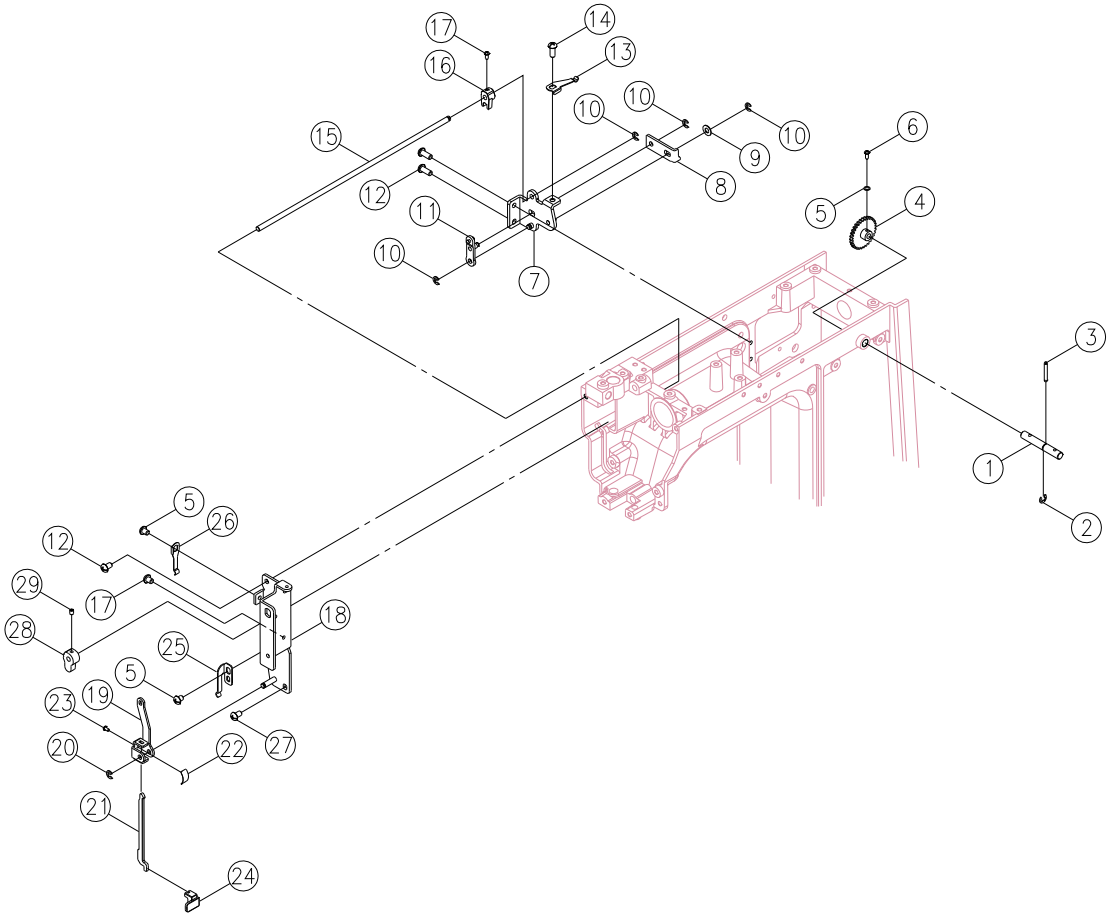

3.Feed regulator dial shaft,BH selector plate,BH lever plat 选择盘部件						
NO.	Description	Remark				
3-1	Feed regulator dial shaft	花样凸轮轴				
3-2	E-Ring	花样齿轮				
3-3	Spring pin	弹簧销				
3-4	Feed regulator gea	缝目齿轮				
3-5	Washer	整圈				
3-6	Set screw	螺丝				
3-7	BH selector plate	BH 选择台板				
3-8	BH slide plate	BH 移动板				
3-9	Washer	整圈				
3-10	E-Ring	E型卡				
3-11	BH selector plate	BH 选择板				
3-12	Set screw	螺丝				
3-13	BH cam plate	选择凸轮定位板				
3-14	Set screw	螺丝				
3-15	BH select crank shaft	选择凸轮轴				
3-16	BH select crank	花样选择曲柄				
3-17	Set screw	螺丝				
3-18	BH lever plate	面板固定架				
3-19	BH lever crank	锁眼自动倒顺组				
3-20	E-Ring	E型卡				
3-21	BH leve	BH 杆				
3-22	BH lever spring plate	BH 杆弹簧板				
3-23	Set screw	螺丝				
3-24	BH lever button	锁眼靠钮				
3-25	BH positioned plate	BH 限制板				
3-26	BH positioned plate	BH 定位板				
3-27	Set screw	螺丝				
3-28	BH movement crank	花样摆动曲柄				
3-29	Set screw	螺丝				

4. Needle bar supporter, Presser bar 针杆, 压杆部件

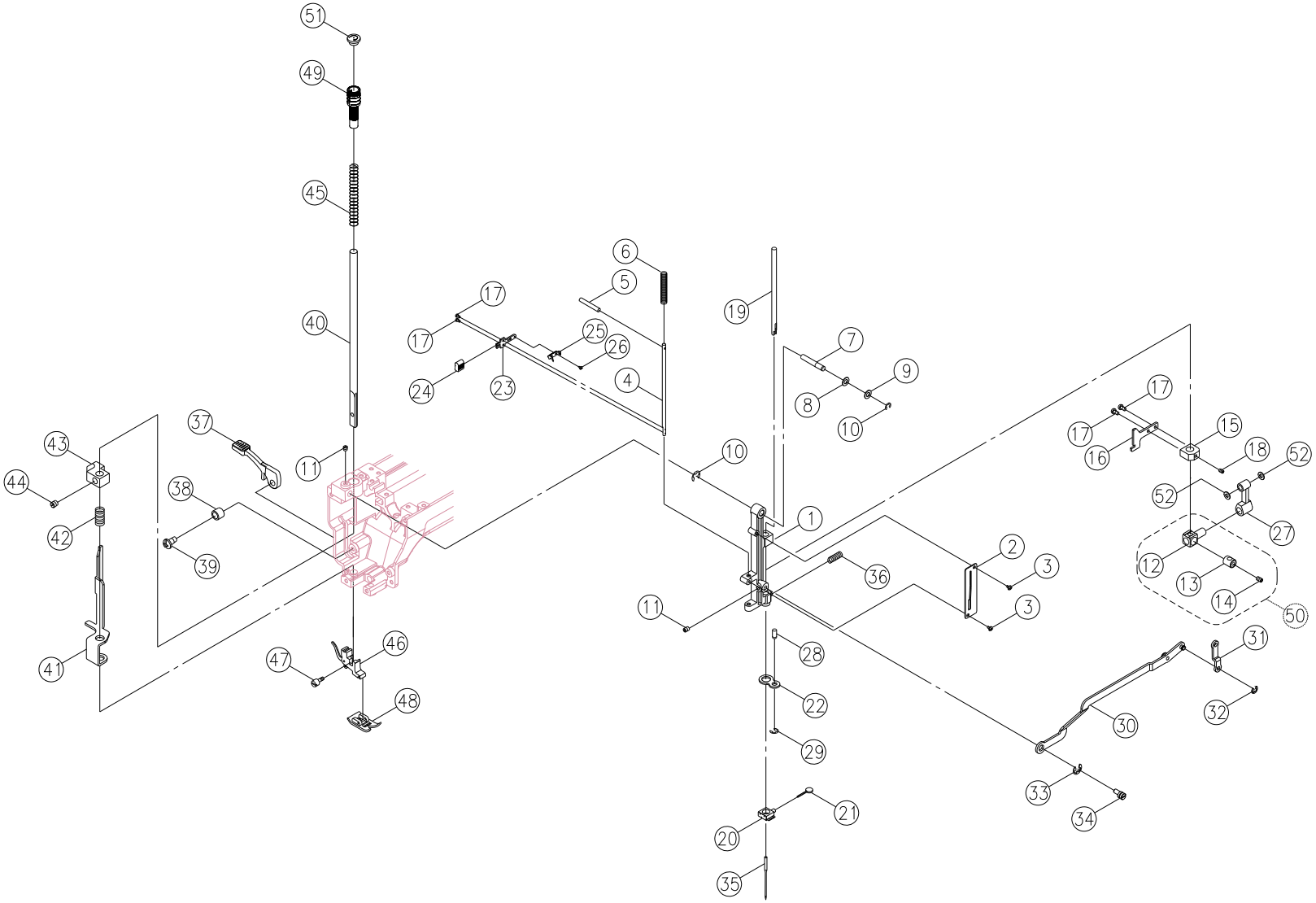

4.Needle bar supporter,Presser bar 针杆，压杆部件						
NO.	Description	Remark		NO.	Description	Remark
4-1	Needle bar supporter	针棒支体		4-34	Needle bar driving rod pin	针杆拉杆偏心销
4-2	Threading guide	穿线导板		4-35	Needle	机针
4-3	Set screw	螺丝		4-36	Needle bar supporter spring	摆动弹簧
4-4	Threading shaft	穿线器轴		4-37	Presser bar lifter lever	压脚板手
4-5	Pin	平行销		4-38	Presser bar lifter lever screw washer	押棒上下杆螺丝垫
4-6	Threading shaft spring	穿器轴弹簧		4-39	Set screw	螺丝
4-7	Needle bar supporter pin	针棒支体销		4-40	Presser bar	压杆
4-8	Washer	波型垫圈		4-41	Tension lever lifter	松线连杆
4-9	Washer	垫圈		4-42	Tension lever lifter spring	松线簧
4-10	E-Ring	E型卡		4-43	Presser bar bracket	压杆导架
4-11	Set screw	螺丝		4-44	Set screw	螺丝
4-12	Needle bar bracket (1)	针棒抱(1)		4-45	Presser bar spring	压杆弹簧
4-13	Needle bar bracket (2)	针棒抱(2)		4-46	Shank complete	主压脚座
4-14	Set screw	螺丝		4-47	Set screw	押布脚螺丝
4-15	Threading stopper	穿线停止器		4-48	Zigzag presser foot (C)	主压脚片
4-16	Threading stop holder	穿线停止板		4-49	Presser bar regulating screw	压杆调节螺丝
4-17	Set screw	支头螺丝		4-50	Needle bar bracket complete	针棒抱组
4-18	Set screw	螺丝		4-51	Cap	帽
4-19	Needle bar	针棒		4-52	Spacer	垫片
4-20	Needle clamp	针留				
4-21	Needle clamp set screw	针留螺丝				
4-22	Needle bar supporter	针杆摆动板				
4-23	Threading plate	穿线器台板				
4-24	Threading button	穿线器钮				
4-25	Threading shaft complete	穿线器组				
4-26	Set screw	螺丝				
4-27	Needle bar crank rod	针杆连杆				
4-28	Needle bar supporter plate pin	抬牙连杆销				
4-29	E-Ring	E型卡				
4-30	Needle bar driving rod	针杆拉杆				
4-31	Zigzag width crank rod	阔度腕连杆				
4-32	E-Ring	E型卡				
4-33	E-Ring	E型卡				

5. Feed regulating, Feed rock shaft, Belt adjusting plate 送料部件

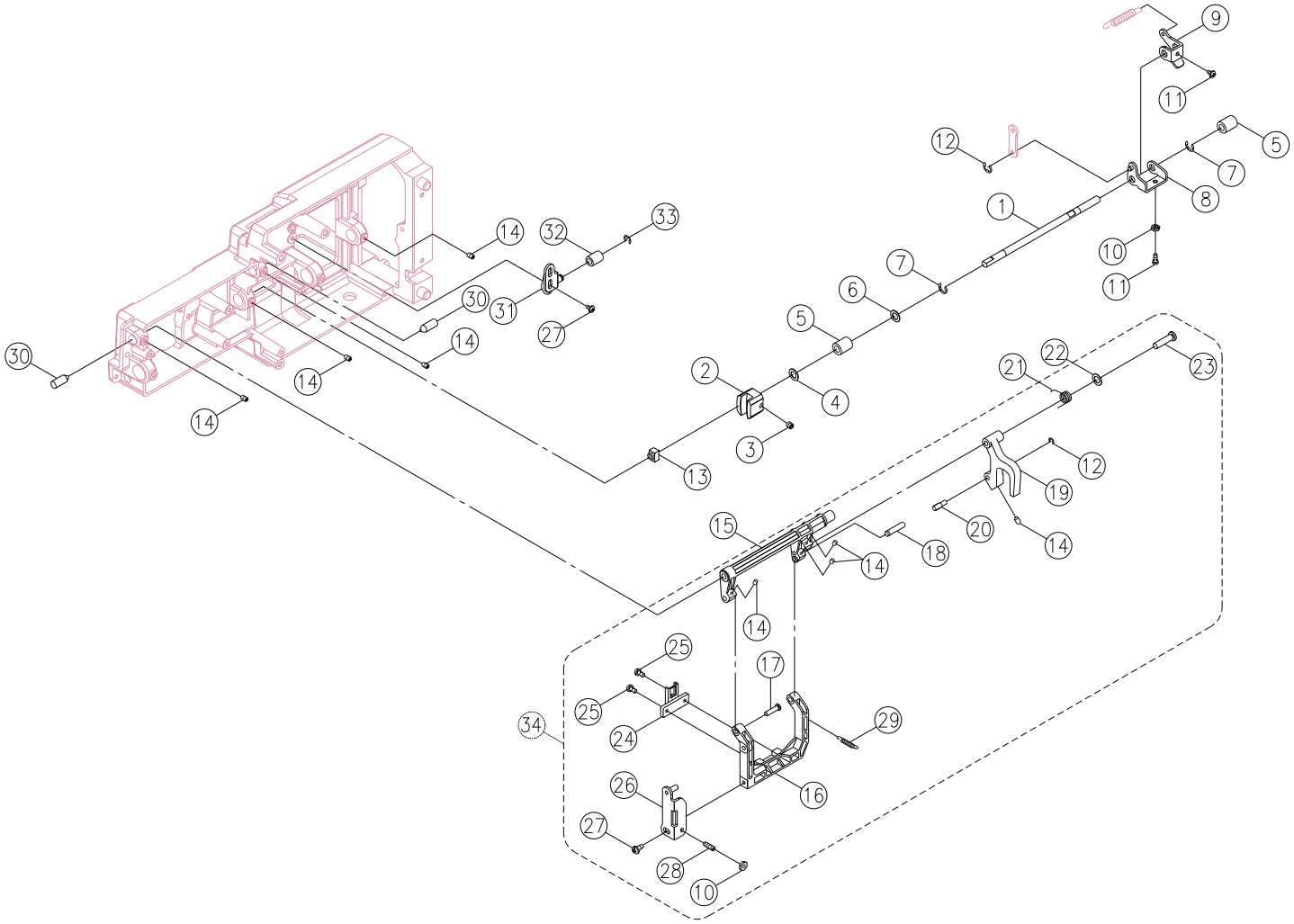

5.Feed regulating,Feed rock shaft,Belt adjusting plate 送料部件						
NO.	Description	Remark		NO.	Description	Remark
5-1	Feed regulating shaft	针距调节器轴		5-33	E-Ring	E型卡
5-2	Feed requlating	针距调节器		5-34	Feed rock shaft complete	水平传送轴组
5-3	Set screw	螺丝				
5-4	Washer	耐磨垫圈				
5-5	Feed rock bushing	针距调节轴套 2只				
5-6	Washer	垫圈				
5-7	E-Ring	E型卡				
5-8	Feed regulating crank	针距调节板 大				
5-9	Feed crank	针距调节板 小				
5-10	Adjusting nut	调节固定螺帽				
5-11	Set screw	螺丝				
5-12	E-Ring	E型卡				
5-13	Feed regulating block	针距调节器滑块				
5-14	Set screw	螺丝				
5-15	Feed rock shaft	水平传送轴				
5-16	Feed dog supporter	送布齿台				
5-17	Feed dog shaft	送布齿台轴				
5-18	Feed rock frame shaft (2)	水平传送土台轴(2)				
5-19	Feed rock crank	水平传送腕				
5-20	Regulating block shaft	传送调节器滑块轴				
5-21	Feed rock crank spring	水平传送腕弹簧				
5-22	Washer	垫圈				
5-23	Feed rock shaft	水平传送腕轴				
5-24	Feed dog	送料牙				
5-25	Set screw	元柱头螺丝 3.5*8 2只				
5-26	Feed lifting rock crank	针距上下连杆				
5-27	Set screw	螺丝				
5-28	Set screw	调整螺丝				
5-29	Feed dog spring	送布牙弹簧				
5-30	Feed crank shaft	顶尖销 2只				
5-31	Belt adjusting plate	皮带调节器				
5-32	Timing belt adjusting roller	皮带调节套				

6. Lower shaft, Rotary hook 下轴部件

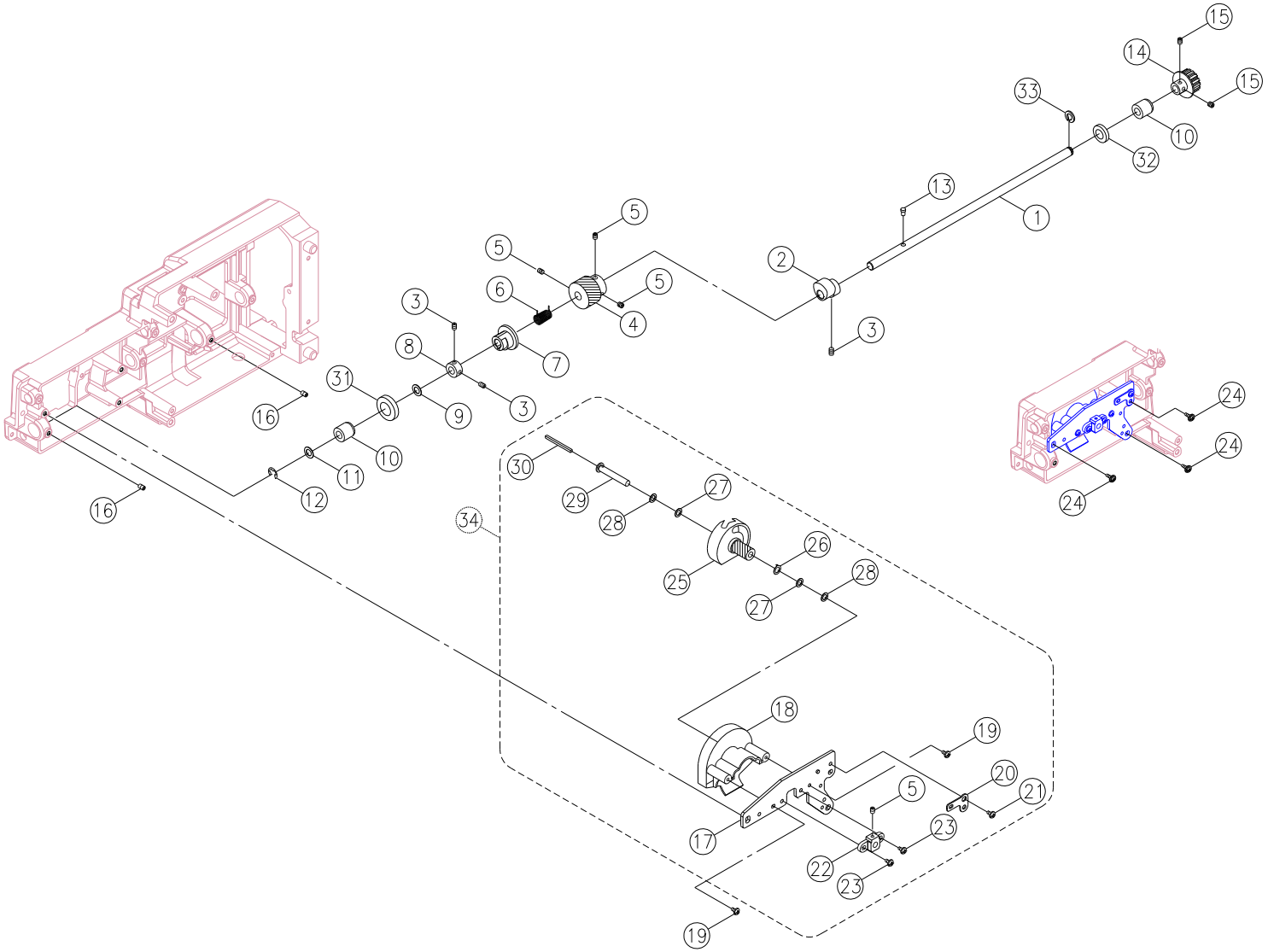

6.Lower shaft,Rotary hook 下轴部件						
NO.	Description	Remark		NO.	Description	Remark
6-1	Lower shaft	下轴		6-33	C-Ring	C型卡扣
6-2	Feed rock cam	水准传送凸轮		6-34	Rotary hook holder complete	梭支持板组
6-3	Set screw	螺丝				
6-4	Lower shaft gear	下轴齿轮				
6-5	Set screw	螺丝				
6-6	Lower shaft spring	落牙弹簧				
6-7	Feed lifting rock cam	上下传送凸轮				
6-8	Lower shaft collar	下轴挡圈 （φ15*7H*φ8)				
6-9	Endure attrition washer	耐磨整圈				
6-10	Lower shaft bushing	下轴轴套 2只				
6-11	Washer	垫圈				
6-12	E-Ring	E型卡				
6-13	Feed lifting rock com pin	针距凸轮销				
6-14	Lower shaft belt pulley	下轴同步带轮				
6-15	Set screw	下轴皮带轮螺丝				
6-16	Set screw	螺丝				
6-17	Rotary hook holder	梭支持板				
6-18	Needle plate cover	梭保护盖				
6-19	Set screw	螺丝				
6-20	Rotary hook holder positioned plate	水平釜固定组				
6-21	Set screw	螺丝				
6-22	Rotary hook supporter	梭支持台				
6-23	Set screw	螺丝				
6-24	Set screw	螺丝(华司头)				
6-25	Shuttle hook holder	外釜组				
6-26	Bobbin shaft washer (3)	外釜铜垫片带止动				
6-27	Endure attrition washer	耐磨垫圈				
6-28	Bobbin shaft washer (2)	外釜铜平垫片				
6-29	Bobbin shaft	外釜轴				
6-30	Bobbin shaft oil cloth	梭轴油棉				
6-31	Felt seal	羊毛毡 30*2.5*2.5				
6-32	Felt seal	羊毛毡 12.7*18.7*3.5				

7. Needle position plate, Bobbin winder, Reverse lever 绕线, 倒送料部件

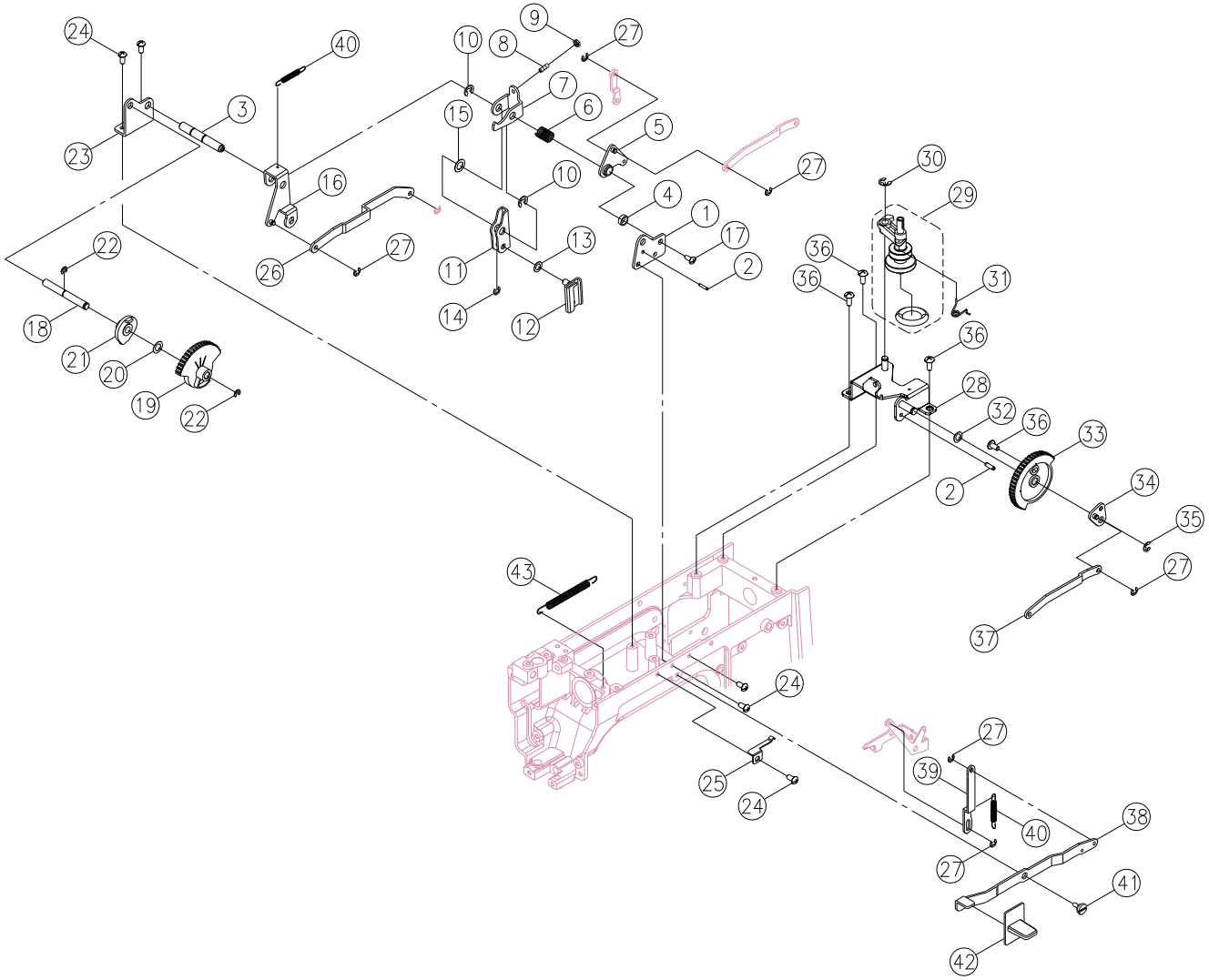

7.Needle position plate,Bobbin winder,Reverse lever 绕线，倒送料部件						
NO.	Description	Remark		NO.	Description	Remark
7-1	Needle position plate (front)	左右针位组件		7-32	Washer	波型垫圈
7-2	Hand wheel bushing pin	弹簧销		7-33	Zigzag width dial	左右针转钮(大)
7-3	Needle position crank shaft	基点腕轴		7-34	Zigzag regulator crank	针距调节连接板
7-4	Tube	间隔套管		7-35	E-Ring	E型卡
7-5	Zigzag width crank	阔度腕		7-36	Set screw	螺丝
7-6	Tension lever lifter spring	松线调节板弹簧		7-37	Zigzag width adjustment rod	针距调节连杆
7-7	Needle position adjustment crank	基点调节腕		7-38	Reverse lever	后退杆
7-8	Set screw	调整螺丝		7-39	Reverse rod	倒针连杆组
7-9	Set Nut	调整固定螺帽		7-40	Auto threaded lever spring	自动穿线拉簧
7-10	E-Ring	E型卡		7-41	Set screw	倒针固定螺丝
7-11	Needle position crank	基点腕		7-42	Reverse button	倒针板手
7-12	Zigzag width regulating cam box	阔度调节器		7-43	Needle position spring	左右针拉簧
7-13	Washe	垫圈				
7-14	E-Ring	E型卡				
7-15	Washer	垫圈				
7-16	Amplitude crank	振幅腕				
7-17	Set screw	螺丝				
7-18	Needle position button shaft	左右针位轴				
7-19	Needle position button	左右针旋钮				
7-20	Washer	波型垫圈				
7-21	Needle position cam	左右针位凸轮				
7-22	E-Ring	E型卡				
7-23	Needle position plate (back)	左右针位后板				
7-24	Set screw	螺丝				
7-25	Needle position plate	左右针位固定板				
7-26	Rod	左右针位连杆				
7-27	E-Ring	E型卡				
7-28	Bobbin winder frame plate complete	卷线器台组				
7-29	Bobbin winder crank complete	绕线器组				
7-30	E-Ring	E型卡				
7-31	Bobbin winder crank spring	绕线器弹簧				

8. Motor &Lamp holder 电机,灯部件

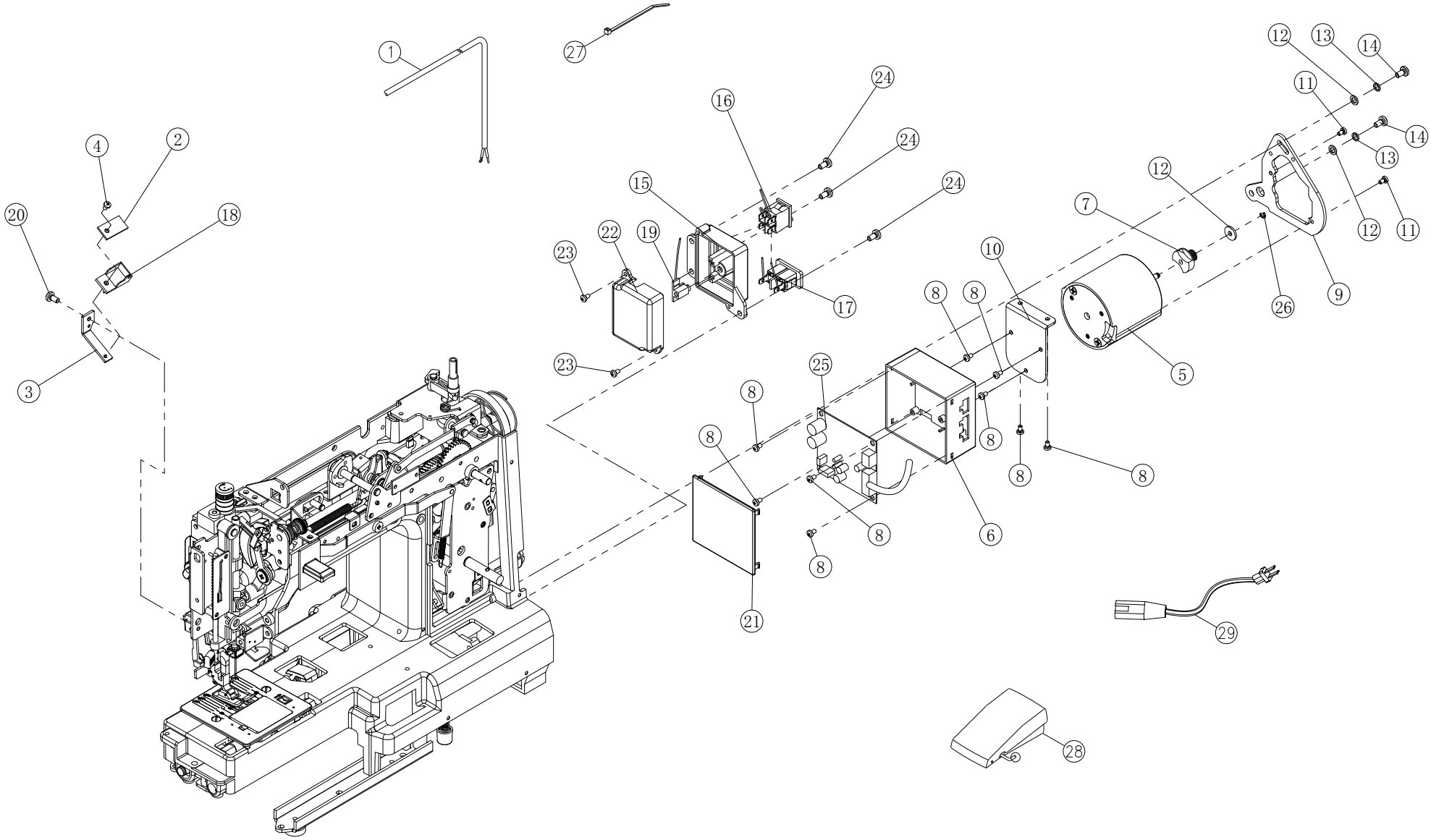

8.Motor &Lamp holder 电机，灯部件						
NO.	Description	Remark				
8-1	Lamp holder complete	电灯线组				
8-2	LED light	LED灯				
8-3	LED stand	LED灯架				
8-4	LED fixing screw	LED灯固定螺钉				
8-5	Motor	电机				
8-6	Motor box	电控盒				
8-7	Belt wheel	马达皮带轮				
8-8	Set screw	螺丝				
8-9	Motor bracket	电机固定板				
8-10	Motor fixing plate	电控盒固定架				
8-11	Set screw	马达固定螺丝				
8-12	Washer	垫圈				
8-13	Spring washer	弹簧垫圈				
8-14	Set screw	马达组螺丝				
8-15	Receptacle holder	插座支架				
8-16	Switch ass'y	开关组				
8-17	Receptacle	插座				
8-18	LED stand seat	LED座				
8-19	Foot controller seat	脚控器座				
8-20	Set screw	螺丝				
8-21	Motor box cover	电控盒盖				
8-22	Receptacle holder cover	插座支架盖				
8-23	Set screw	螺丝				
8-24	Set screw	螺丝				
8-25	Circuit board	电路板				
8-26	E-Ring	E型卡				
8-27	Cord clip	锁式轧带				
8-28	Foot controller	控制器				
8-29	Power cord	电源线				

9. Dial tension, Rotary hook plate, Needle plate 针板部件

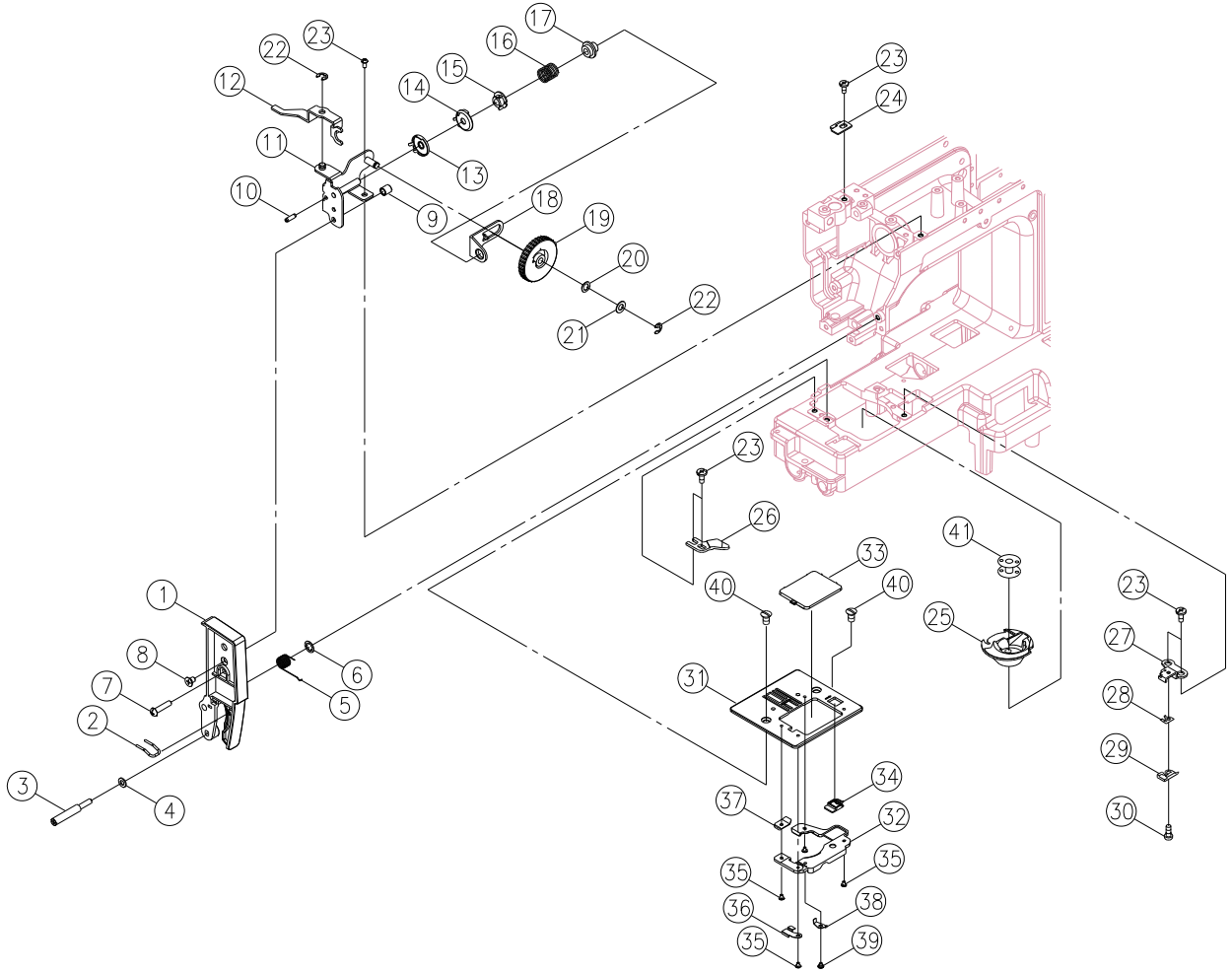

9.Dial tension,Rotary hook plate,Needle plate 针板部件						
NO.	Description	Remark		NO.	Description	Remark
9-1	Dial tension supporter plate cover	过线板		9-33	Needle plate cover	针板盖
9-2	Thread guide	过线勾		9-34	Needle plate cover open	针板盖开键
9-3	Set screw	过线板(下)螺丝		9-35	Set screw	螺丝(十字伞头)
9-4	Washer	垫圈		9-36	Needle plate spring	针板盖弹簧板
9-5	Dial tension spring	夹线挑线簧		9-37	Needle plate cover plate	针板盖固定板
9-6	Thread guide spring washer	CS扣环		9-38	Needle plate cover spring	针板盖弹片
9-7	Set screw	螺丝		9-39	Set screw	螺丝(自攻割尾)
9-8	Set screw	螺丝		9-40	Set screw	针板螺丝(皿弧)
9-9	Dial tension guide spring tube	夹线调节器套		9-41	Bobbin	梭线轮
9-10	Hand wheel bushing pin	弹簧销				
9-11	Dial tension supporter plate	松线调节组				
9-12	Dial tension waft plate	浮动板				
9-13	Dial tension disc(1)	上系调节器护线板(1)				
9-14	Dial tension disc	线调节盘系调子(皿)				
9-15	Dial tension spring regulator	上系调节器弹簧衬套				
9-16	Dial tension spring	上系弹簧				
9-17	Dial tension regulator	上系调节器调整筒				
9-18	Dial tension spring plate	上线弹簧压板				
9-19	Dial tension knob	松线调节钮				
9-20	Washer	波型垫圈				
9-21	Washer	垫圈				
9-22	E-Ring	E型止环				
9-23	Set screw	螺丝				
9-24	Tension lever regulating plate	松线压板				
9-25	Shuttle hook complete	内釜组				
9-26	Rotary hook plate	内釜定位板(1)				
9-27	Rotary hook plate (2)	内釜定位板(2)				
9-28	Rotary hook plate spring (2)	梭定位板弹簧(2)				
9-29	Rotary hook plate spring (1)	梭定位板弹簧(1)				
9-30	Set screw	螺丝(伞头)				
9-31	Needle plate	针板				
9-32	Needle plate cover	针板盖固定台				

10. Front cover, Back cover, Free arm slab, Free arm base, Base cover
前后罩部件

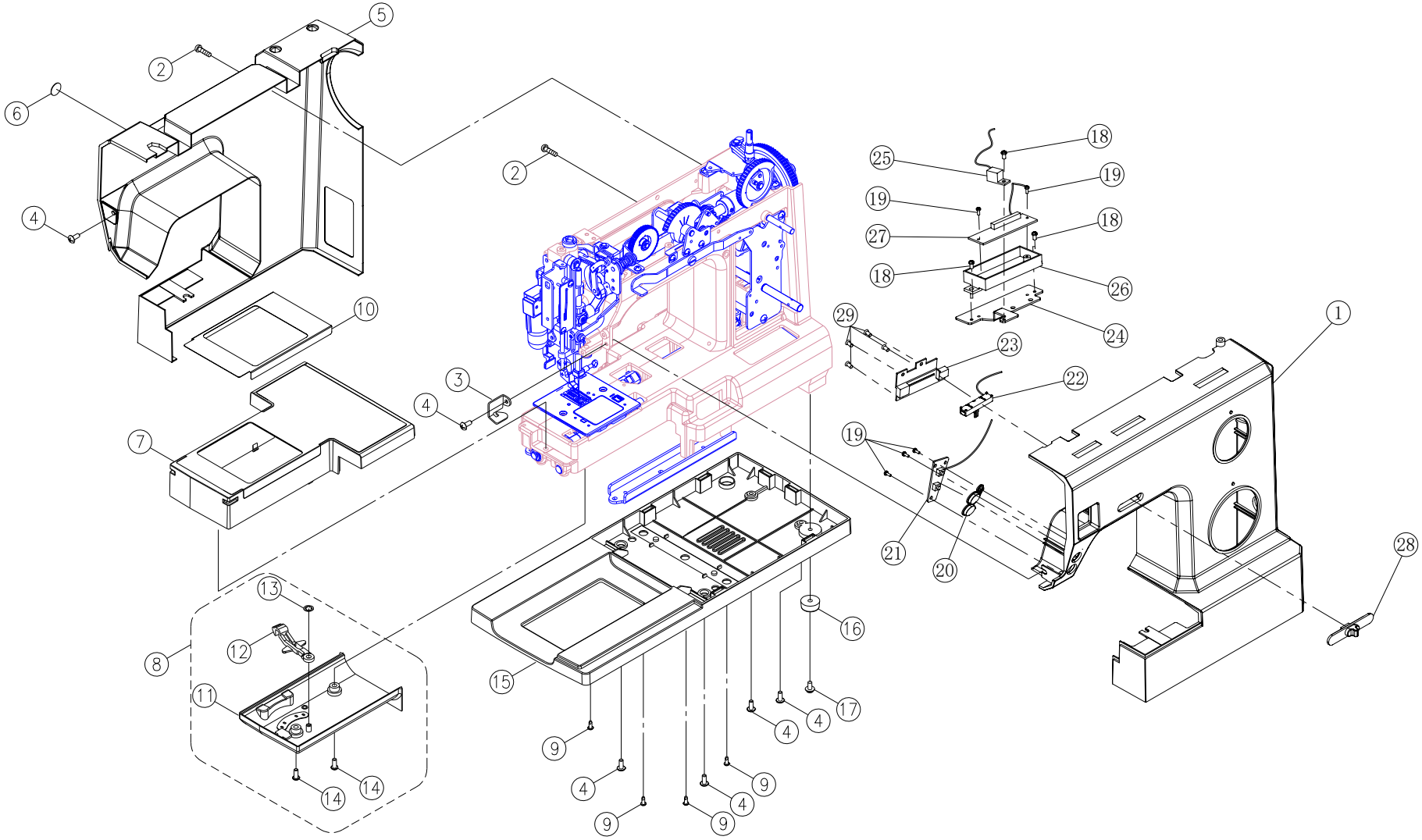

10.Front cover,Back cover,Free arm slab,Free arm base,Base cover 前后罩部件						
NO.	Description	Remark				
10-1	Front cover	前盖				
10-2	Set screw	螺丝				
10-3	Arm top cover thread guide plate	针线拦线板				
10-4	Set screw	螺丝				
10-5	Back cover	后盖				
10-6	Plate	作业孔饰板(1)				
10-7	Free arm slab 1	底板				
10-8	Bracket	齿升组件				
10-9	Set screw	螺丝				
10-10	needle plate decoration cover	针板装饰板				
10-11	Free arm slab 2	水平釜盖				
10-12	Free arm slab lever	水平釜盖调节杆				
10-13	CS-ring	CS 扣环				
10-14	Set screw	螺丝				
10-15	Base cover	底板盖				
10-16	Free arm base cushion rubber	底盘座橡胶垫				
10-17	screw	螺丝（含华司）				
10-18	M3 screw	螺丝				
10-19	M2 screw	螺丝				
10-20	Button	按钮				
10-21	Button chip	按钮芯片				
10-22	Speed adjustment slider	调速滑块				
10-23	Speed adjustment slider fixer	调速滑块固定塑料件				
10-24	Trasit chip fixing sheet metal	中转芯片固定钣金件				
10-25	Sensor	感应器				
10-26	Transit chip plastic fixing box	中转芯片塑料固定盒				
10-27	Transit chip	中转芯片				
10-28	Speed adjustment slider part	调速滑块塑料件				
10-29	screw	平头M3				

11. Arm top cover, Face plate, Stitch length dial, Selector dial, Sewing table 侧罩, 上盖部件

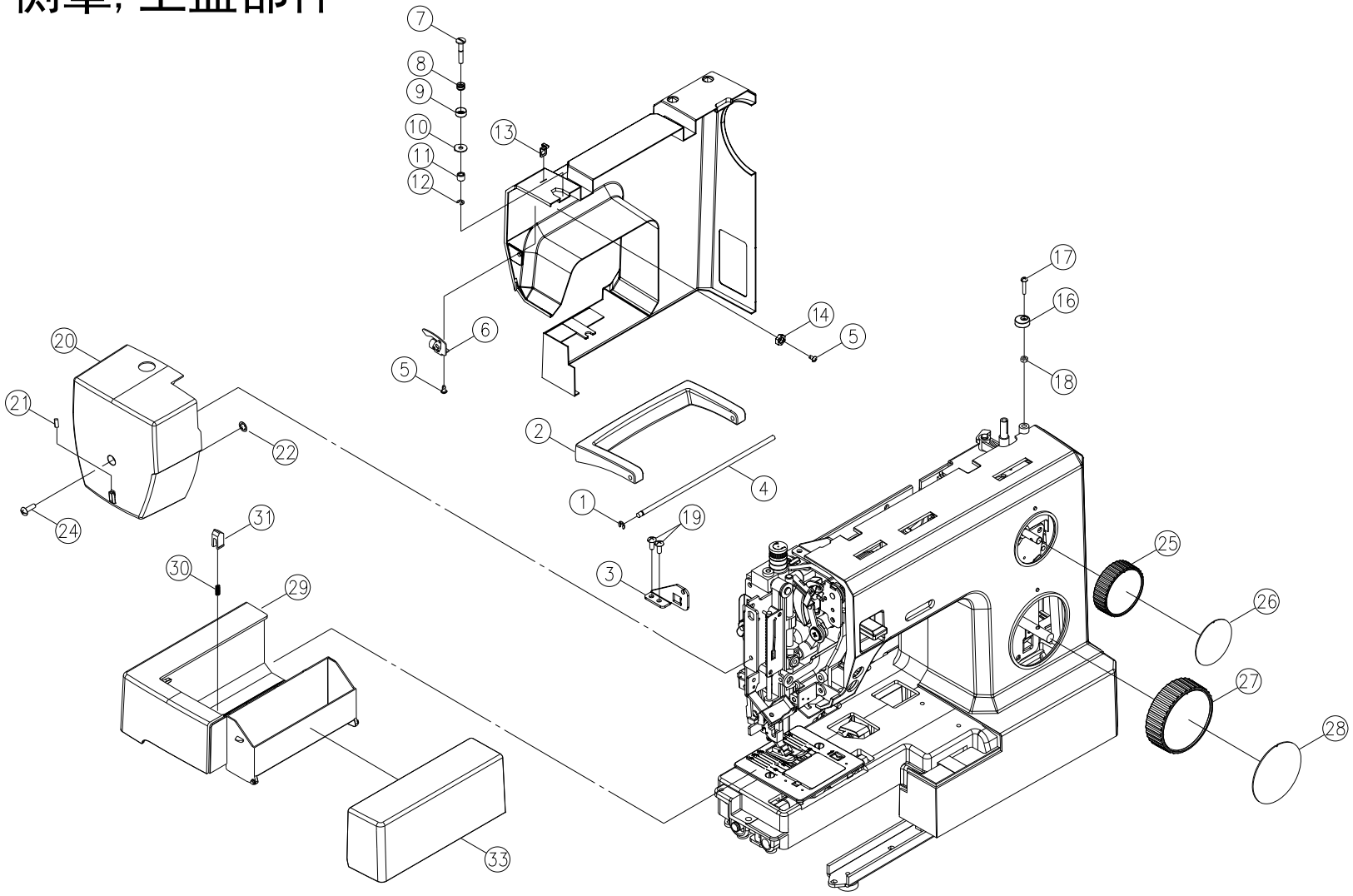

11.Arm top cover,Face plate,Stitch length dial,Selector dial,Sewing table 侧罩，上盖部件						
NO.	Description	Remark				
11-1	E-Ring	E型卡				
11-2	Handle	提手				
11-3	Handle bracket	提手支架				
11-4	Handle pin	把手销				
11-5	Screw	螺丝				
11-6	Thread guide Complete	上线过线板				
11-7	Bobbin winder thread guide adjusting	卷线导板螺丝				
11-8	Bobbin winder thread guide spring	卷线导板弹簧				
11-9	Bobbin winder spring disc	导线弹簧座				
11-10	Bobbin winder thread guide	卷线导板				
11-11	Spacer	卷线导板衬套				
11-12	E-Ring	E型卡				
11-13	Thread quide	上线导线板				
11-14	Spool pin base	螺母				
11-16	Bobbin winde	卷线轮固定轴				
11-17	Set screw	螺丝				
11-18	Nut	螺帽				
11-19	Set screw	螺丝				
11-20	Face plat	面板				
11-21	Cutter	刀片				
11-22	CS-ring	CS 扣环				
11-24	Set screw	螺丝				
11-25	Stitch length dia	针距选择旋钮				
11-26	Stitch length dial pane	针距选择旋钮装饰板(小)				
11-27	Selector dial	花样选择旋钮				
11-28	Selector dial pane	花样选择旋钮饰板(大)				
11-29	Sewing table body	附件盒				
11-30	Sewing table body guide spring	附件盒簧				
11-31	Sewing table body quide	附件盒勾				
11-33	Sewing table body cover	附件盒盖				